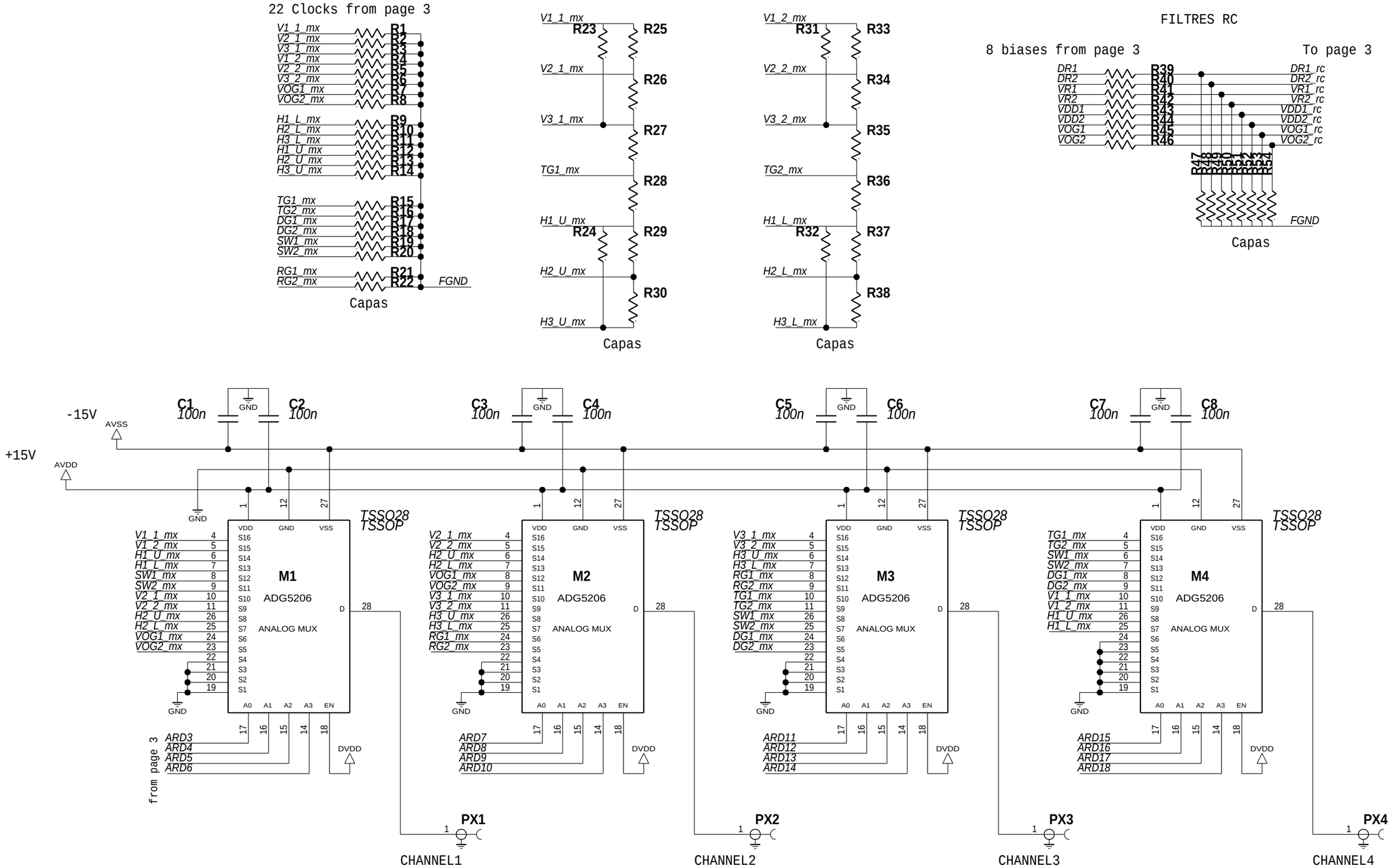

REF: testsequencer

LABORATOIRE DE PHYSIQUE NUCLEAIRE
ET DE HAUTES ENERGIES
L.P.N.H.E. - IN2P3 - UPMC - CNRS
4 PLACE JUSSIEU 75005 PARIS
FAX: 01 44 27 47 58

LPNHE PARIS

ETUDE:	PAGE: 1/4
DESSIN:	REVISION:
PLACEMENT ROUTAGE:	
DATE: Thu Mar 04 16:06:25 2021	

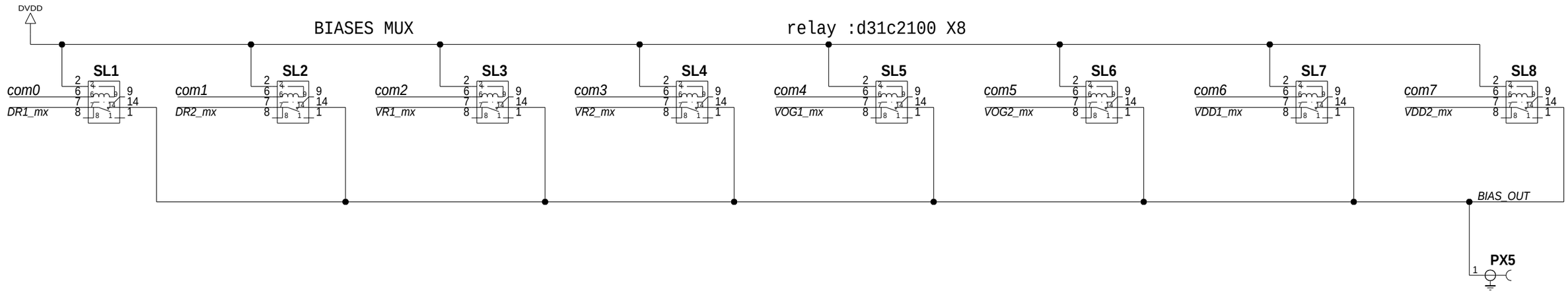

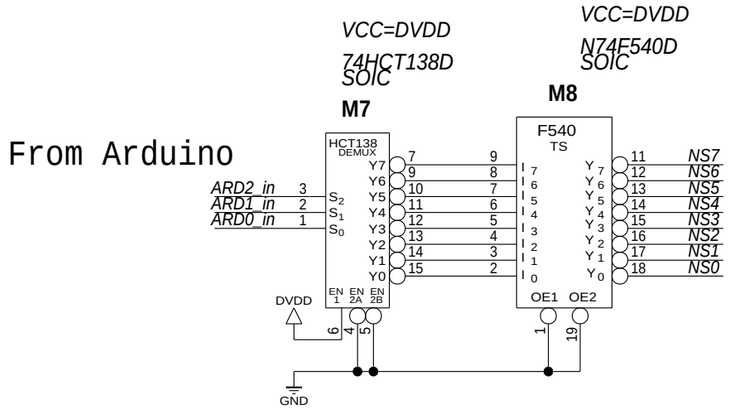

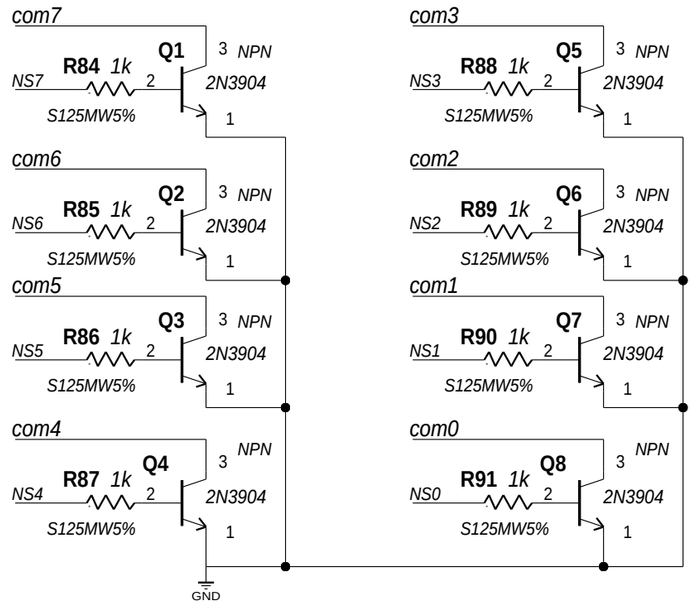

REF: testsequencer

LABORATOIRE DE PHYSIQUE NUCLEAIRE
ET DE HAUTES ENERGIES
L.P.N.H.E. - IN2P3 - UPMC - CNRS
4 PLACE JUSSIEU 75005 PARIS
FAX: 01 44 27 47 58

LPNHE PARIS

ETUDE:	PAGE: 2/4
DESSIN:	REVISION:
PLACEMENT ROUTAGE:	
DATE: Thu Mar 04 16:06:24 2021	

To breakout board
8 Cabacs biases and 22 clocks

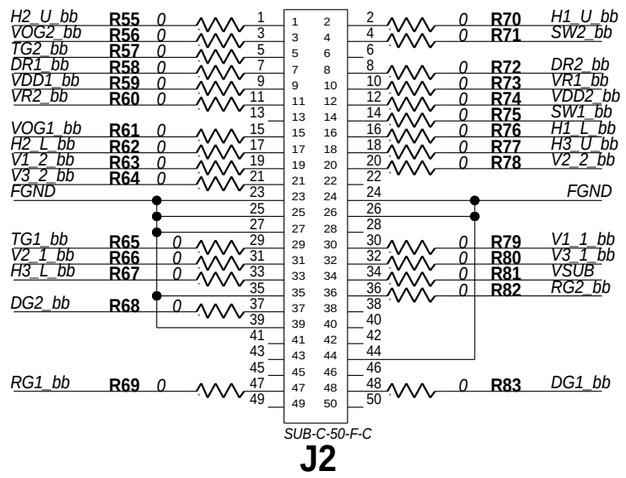

Cabac brd to breakout brd jumpers

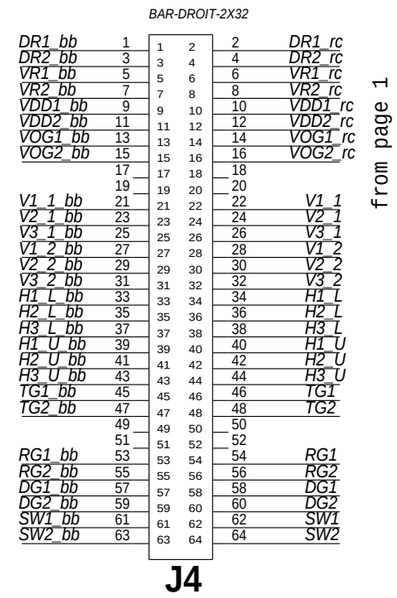

from page 1

From cabac board
8 biases and 22 clocks

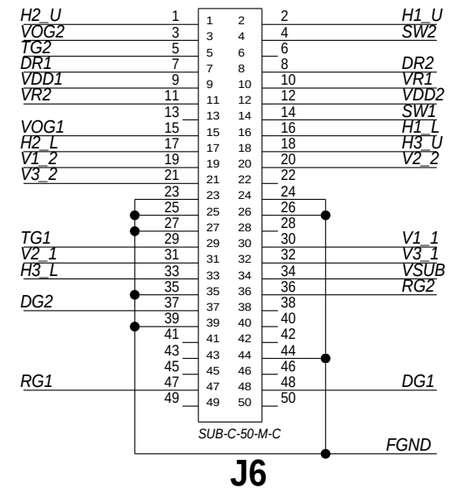

From Arduino mega

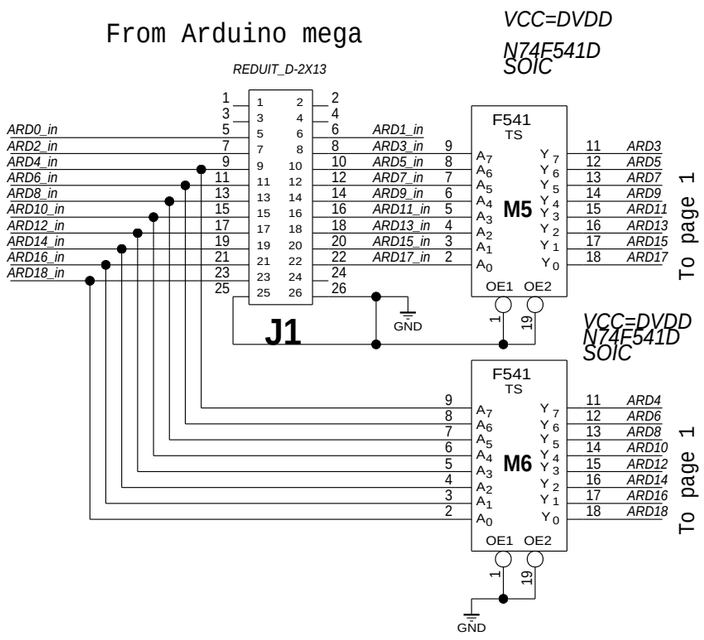

To breakout board
Croc digital signals

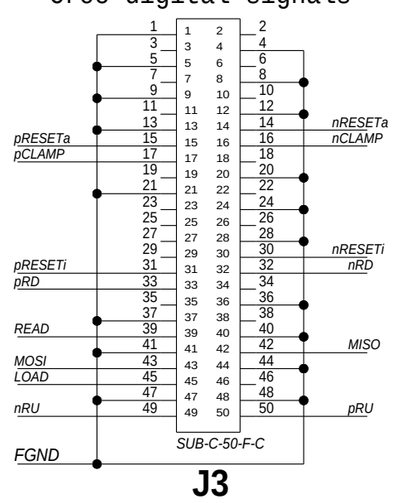

Cabac brd to analog mux jumpers

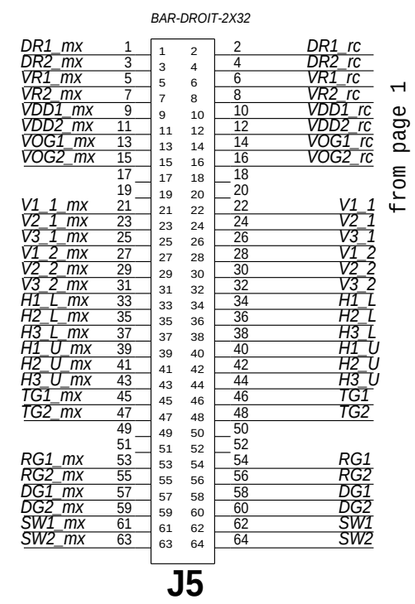

from page 1

From cabac board
Croc digital signals

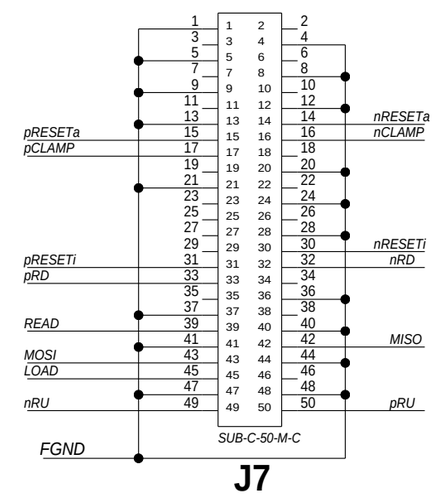

REF: testsequencer	
LABORATOIRE DE PHYSIQUE NUCLEAIRE ET DE HAUTES ENERGIES L.P.N.H.E. - IN2P3 - UPMC - CNRS 4 PLACE JUSSIEU 75005 PARIS FAX: 01 44 27 47 58	ETUDE: / PAGE: 3/4
	DESSIN: / REVISION:
	PLACEMENT ROUTAGE:
	DATE: Thu Mar 04 16:06:20 2021

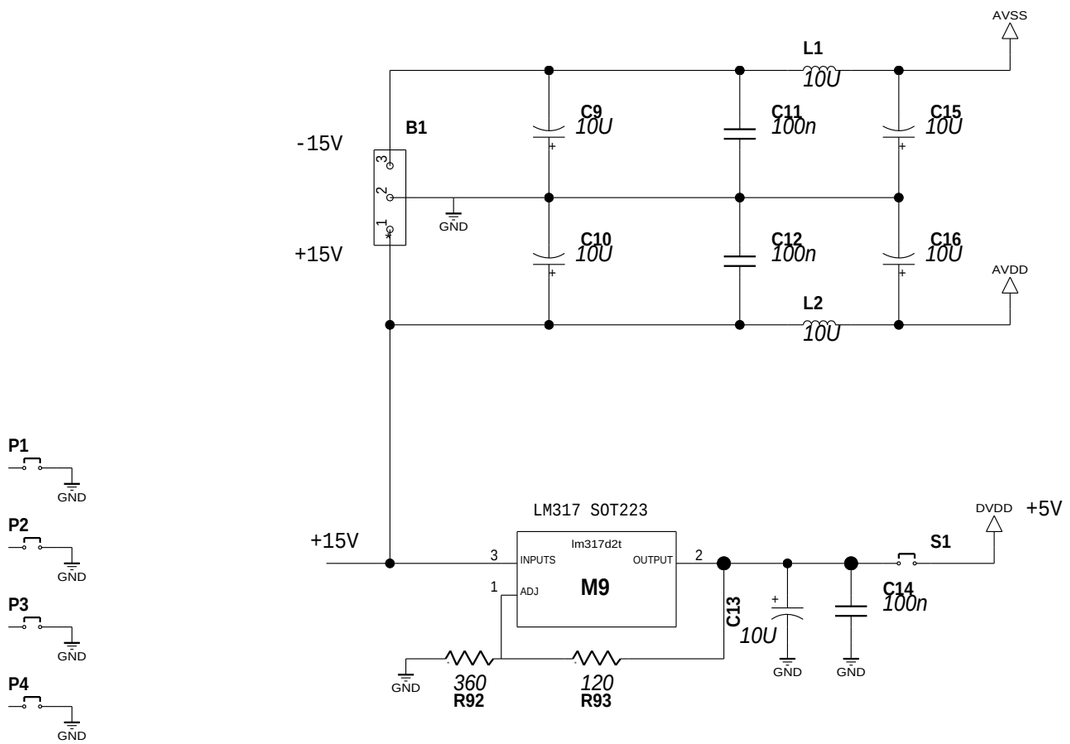

REF: testsequencer

LABORATOIRE DE PHYSIQUE NUCLEAIRE
ET DE HAUTES ENERGIES
L.P.N.H.E. - IN2P3 - UPMC - CNRS
4 PLACE JUSSIEU 75005 PARIS
FAX: 01 44 27 47 58

LPNHE PARIS

ETUDE:	PAGE: 4/4
DESSIN:	REVISION:
PLACEMENT ROUTAGE:	
DATE: Thu Mar 04 16:06:23 2021	