Modified for: -2V < Vin < +2V
S4x_17 = S4x_28 = 1K
S4x_14 = S4x_31 = 2K
S4x_21 = S4x_25 = 470 Ohm
01/05/2023

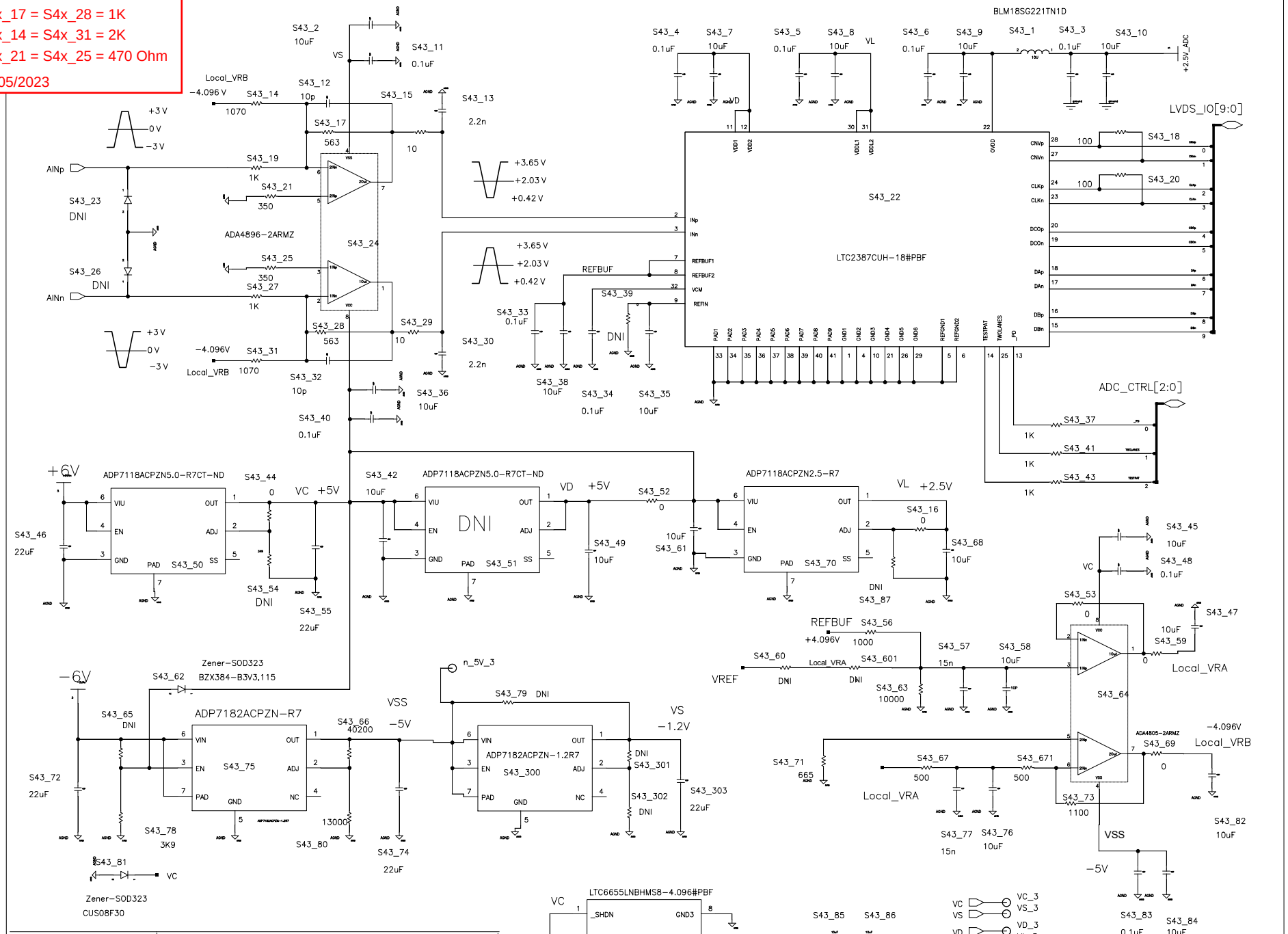

Engineer: M. Bogdan	The University of Chicago
Drawn by: M. Bogdan	DAMIC_ADC_Channel_3
DATE: 10/25/22	REV. A DRW. 3003 Sheet_4_3