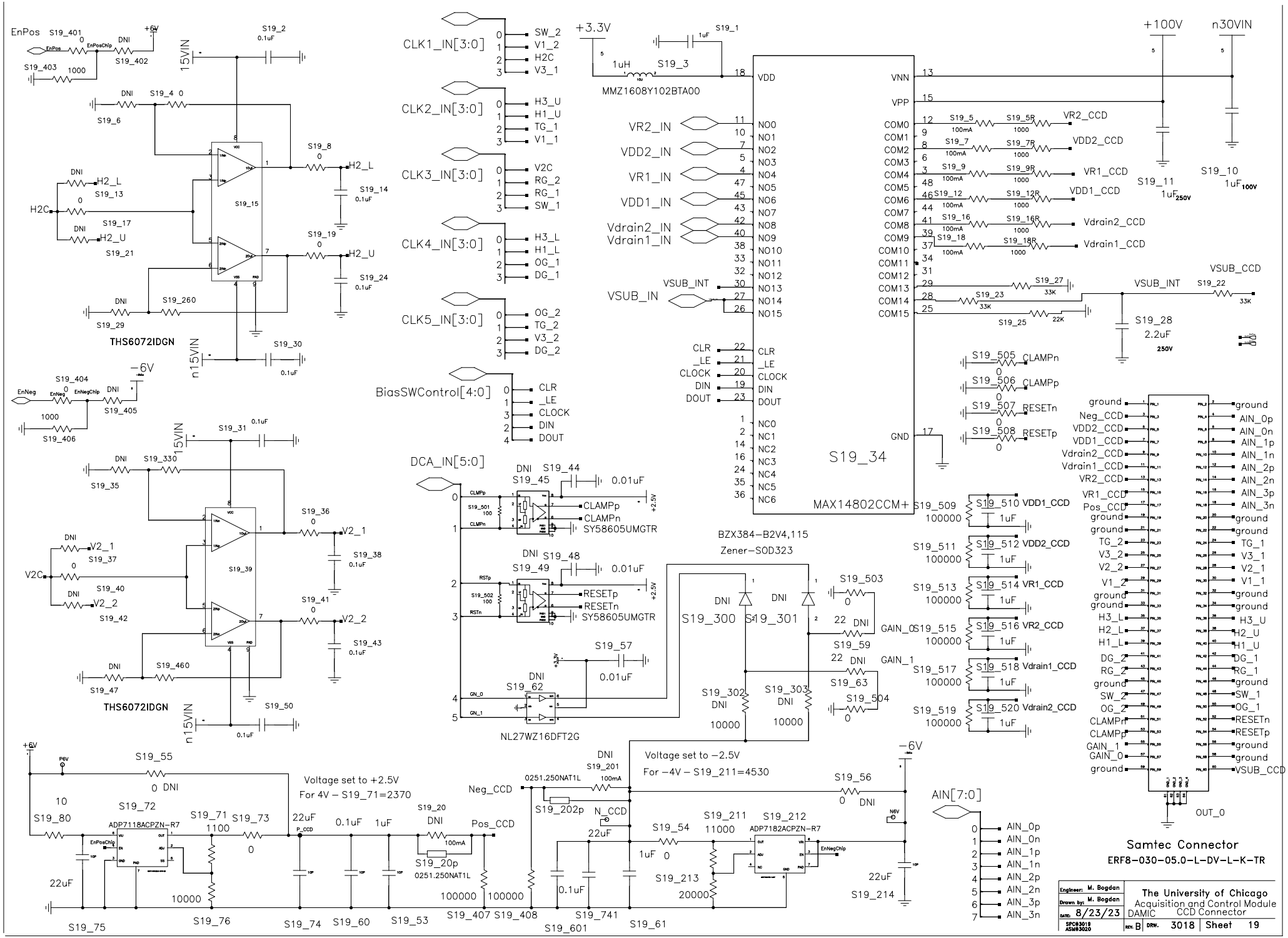
EnPos
S19_401
S19_402
S19_403
EnPosChip
DNI
+6V
15VIN
S19_2
0.1uF
S19_4
S19_6
S19_8
H2_L
S19_14
S19_13
H2C
S19_17
H2_U
S19_21
S19_19
S19_24
S19_15
S19_260
S19_29
THS6072IDGN
n15VIN
S19_30
-6V
EnNeg
EnNegChip
S19_404
S19_405
S19_406
S19_31
S19_330
S19_35
S19_36
V2_1
S19_38
S19_37
V2C
S19_40
V2_2
S19_41
S19_43
S19_42
S19_39
S19_460
S19_47
S19_50
CLK1_IN[3:0]
SW_2
V1_2
H2C
V3_1
CLK2_IN[3:0]
H3_U
H1_U
TG_1
V1_1
CLK3_IN[3:0]
V2C
RG_2
RG_1
SW_1
CLK4_IN[3:0]
H3_L
H1_L
OG_1
DG_1
CLK5_IN[3:0]
OG_2
TG_2
V3_2
DG_2
BiasSWControl[4:0]
CLR
_LE
CLOCK
DIN
DOUT
DCA_IN[5:0]
S19_44
S19_45
0.01uF
CLAMPp
CLAMPn
SY58605UMGTR
S19_48
S19_49
RESETp
RESETn
S19_57
S19_62
NL27WZ16DFT2G
+3.3V
S19_1
1uH
S19_3
MMZ1608Y102BTA00
VR2_IN
VDD2_IN
VR1_IN
VDD1_IN
Vdrain2_IN
Vdrain1_IN
VSUB_IN
VSUB_INT
S19_34
MAX14802CCM+
VDD
VNN
VPP
GND
NO0
NO1
NO2
NO3
NO4
NO5
NO6
NO7
NO8
NO9
NO10
NO11
NO12
NO13
NO14
NO15
NC0
NC1
NC2
NC3
NC4
NC5
NC6
COM0
COM1
COM2
COM3
COM4
COM5
COM6
COM7
COM8
COM9
COM10
COM11
COM12
COM13
COM14
COM15
+100V
n30VIN
S19_11
1uF250V
S19_10
1uF100V
VR2_CCD
VDD2_CCD
VR1_CCD
VDD1_CCD
Vdrain2_CCD
Vdrain1_CCD
S19_27
S19_23
S19_25
S19_22
VSUB_CCD
S19_28
2.2uF
250V
S19_505
S19_506
S19_507
S19_508
CLAMPn
CLAMPp
RESETn
RESETp
BZX384-B2V4,115
Zener-SOD323
S19_300
S19_301
S19_302
S19_303
S19_503
S19_504
S19_59
S19_63
GAIN_0
GAIN_1
S19_509
S19_510
S19_511
S19_512
S19_513
S19_514
S19_515
S19_516
S19_517
S19_518
S19_519
S19_520
VDD1_CCD
VDD2_CCD
VR1_CCD
VR2_CCD
Vdrain1_CCD
Vdrain2_CCD
ground
Neg_CCD
VDD2_CCD
VDD1_CCD
Vdrain2_CCD
Vdrain1_CCD
VR2_CCD
VR1_CCD
Pos_CCD
TG_2
V3_2
V2_2
V1_2
H3_L
H2_L
H1_L
DG_2
RG_2
SW_2
OG_2
CLAMPn
CLAMPp
GAIN_1
GAIN_0
AIN_0p
AIN_0n
AIN_1p
AIN_1n
AIN_2p
AIN_2n
AIN_3p
AIN_3n
TG_1
V3_1
V2_1
V1_1
H3_U
H2_U
H1_U
DG_1
RG_1
SW_1
OG_1
RESETn
RESETp
VSUB_CCD
OUT_0
Samtec Connector
ERF8-030-05.0-L-DV-L-K-TR
+6V
P6V
S19_55
S19_80
S19_72
ADP7118ACPZN-R7
EnPosChip
S19_71
1100
S19_73
22uF
P_CCD
0.1uF
1uF
S19_20
S19_20p
0251.250NAT1L
100mA
Pos_CCD
Voltage set to +2.5V
For 4V – S19_71=2370
S19_75
S19_76
S19_74
S19_60
S19_53
S19_407
S19_408
S19_741
S19_601
S19_61
Neg_CCD
S19_201
S19_202p
N_CCD
Voltage set to –2.5V
For –4V – S19_211=4530
S19_56
S19_54
S19_211
11000
S19_212
ADP7182ACPZN-R7
EnNegChip
S19_213
20000
S19_214
AIN[7:0]
Engineer: M. Bogdan
Drawn by: M. Bogdan
DATE: 8/23/23
The University of Chicago
Acquisition and Control Module
DAMIC
CCD Connector
REV. B
DRW. 3018
Sheet 19