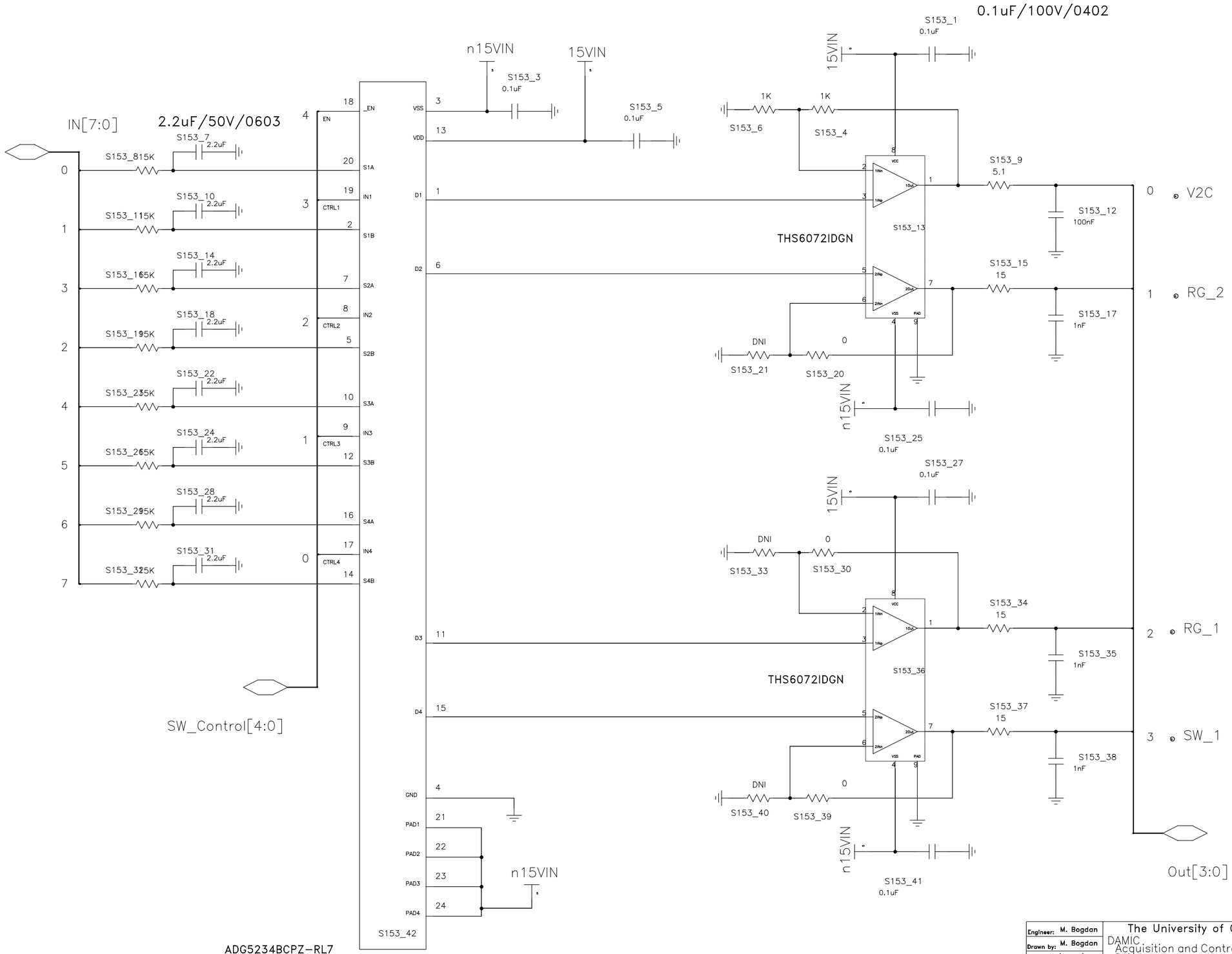

Engineer: M. Bogdan	The University of Chicago	
Drawn by: M. Bogdan	DAMIC Acquisition and Control Module	
DATE: 9/12/23	Clock Generator 1	
SPC#3019 ASM#3020	REV. A DRW. 3018	Sheet 15_3