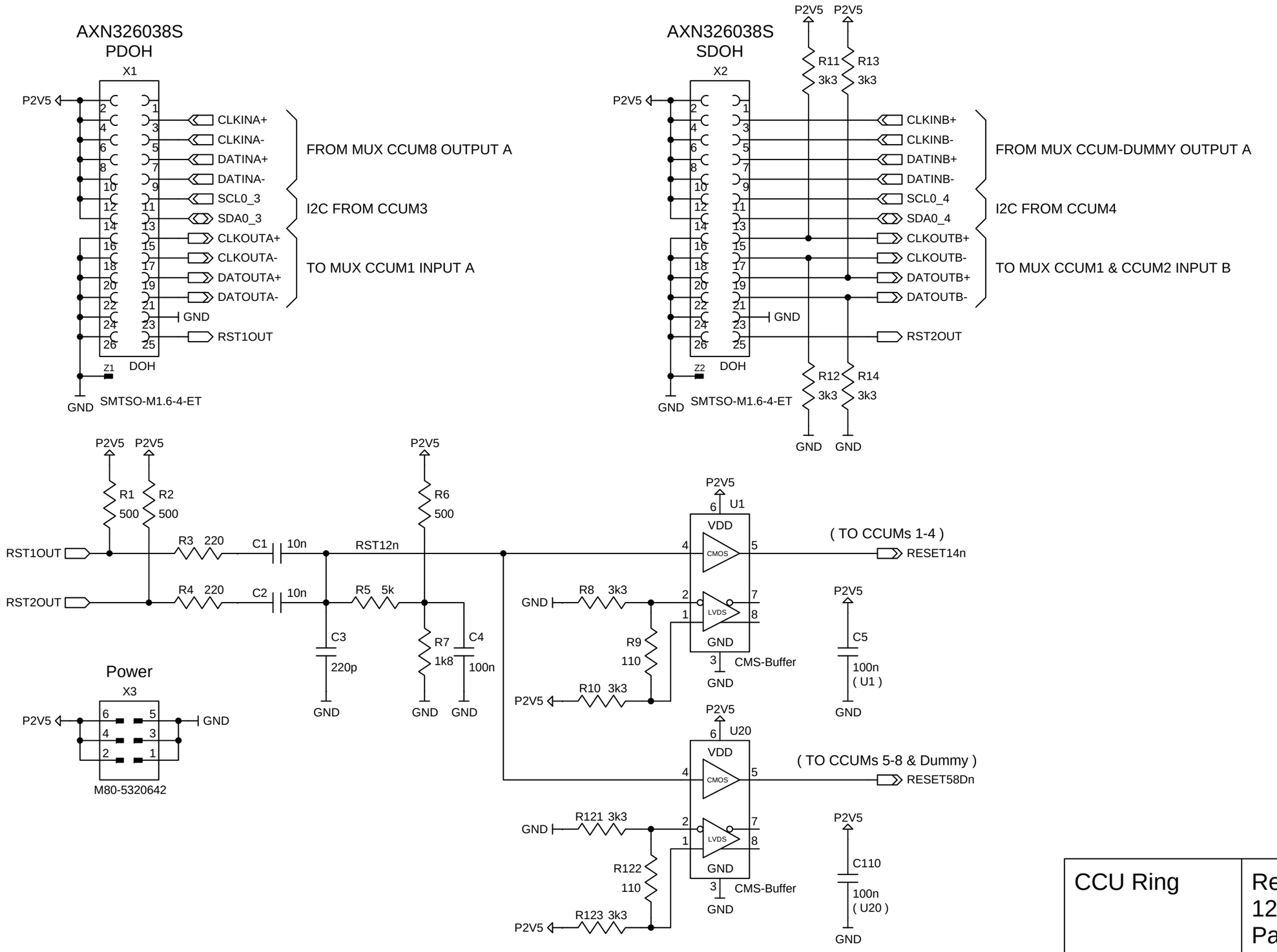

CCU Ring	Release 1.0 12-Apr-2013 Page 1 of 10
DOH / Power Connectors	

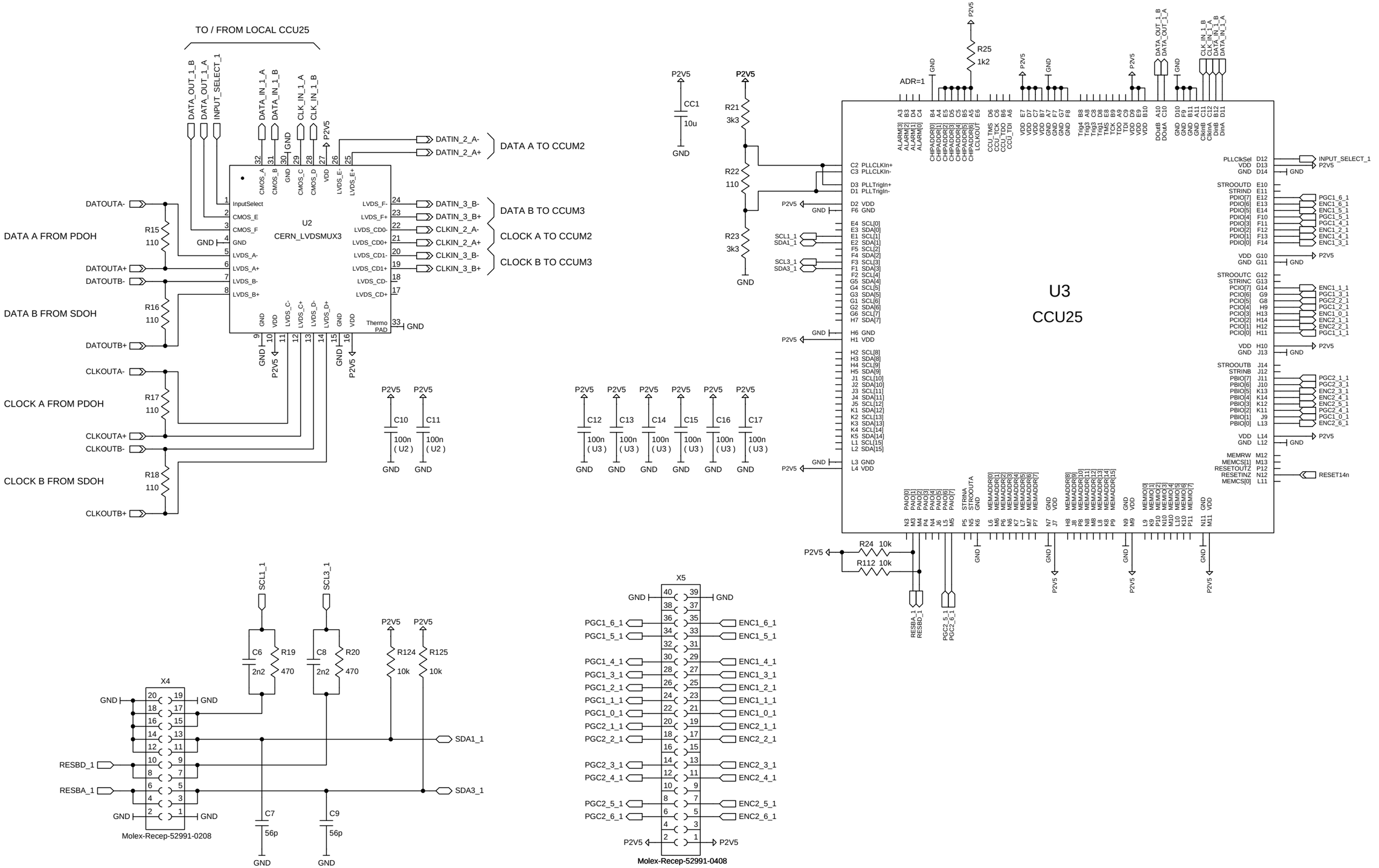

CCU Ring	Release 1.0 12-Apr-2013 Page 2 of 10
CCUM1	

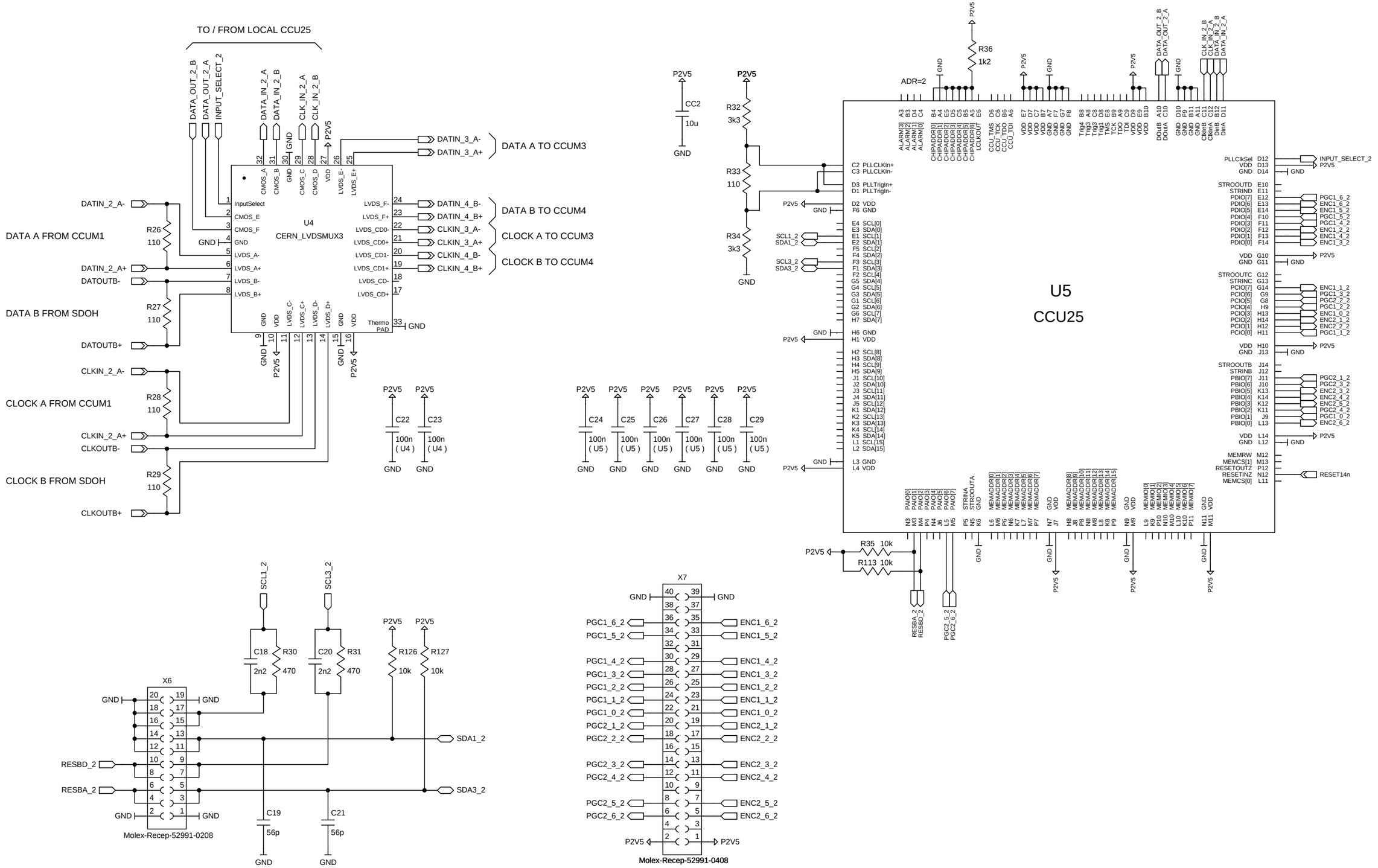

CCU Ring	Release 1.0 12-Apr-2013 Page 3 of 10
CCUM2	

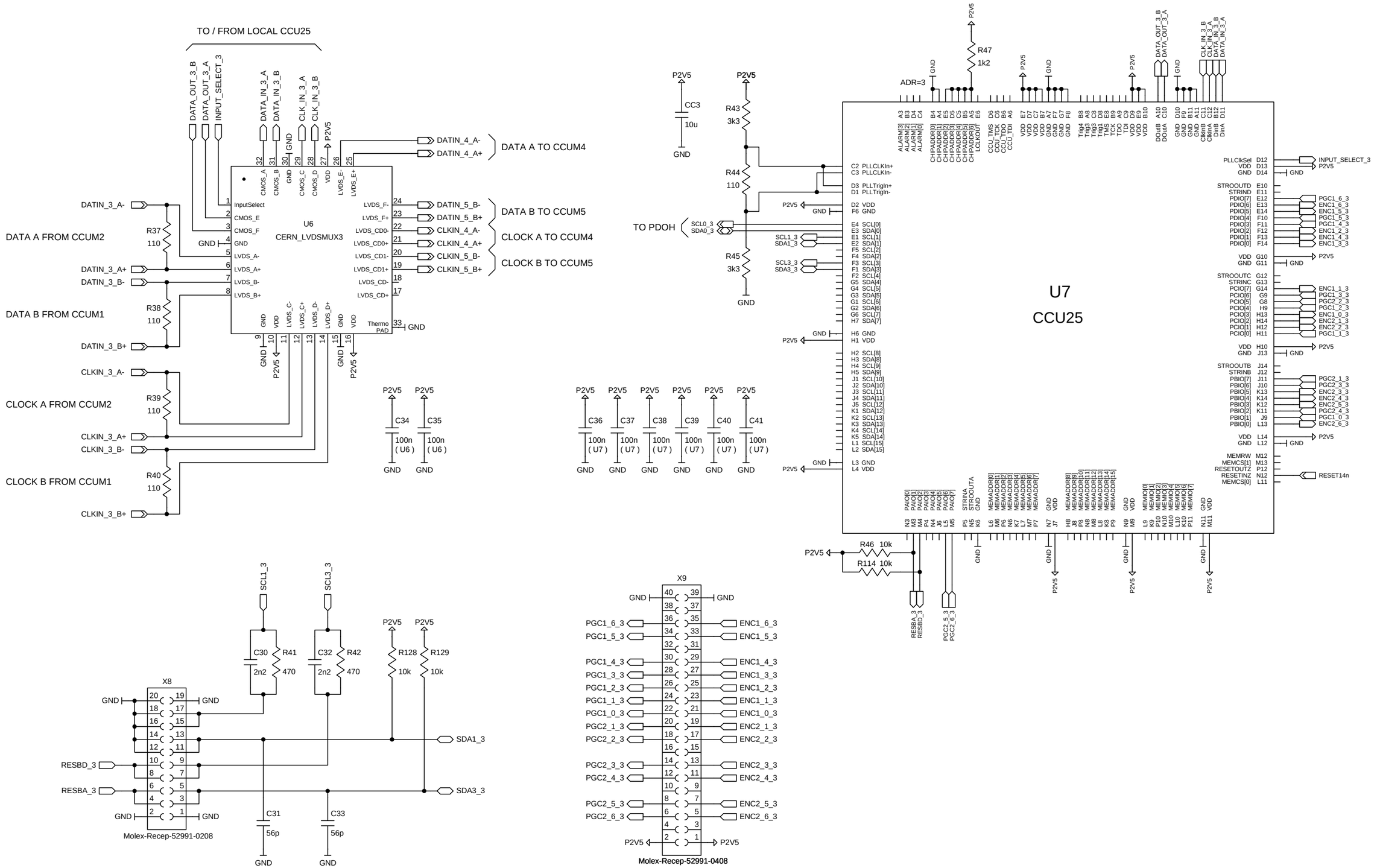

CCU Ring	Release 1.0 12-Apr-2013 Page 4 of 10
CCUM3	

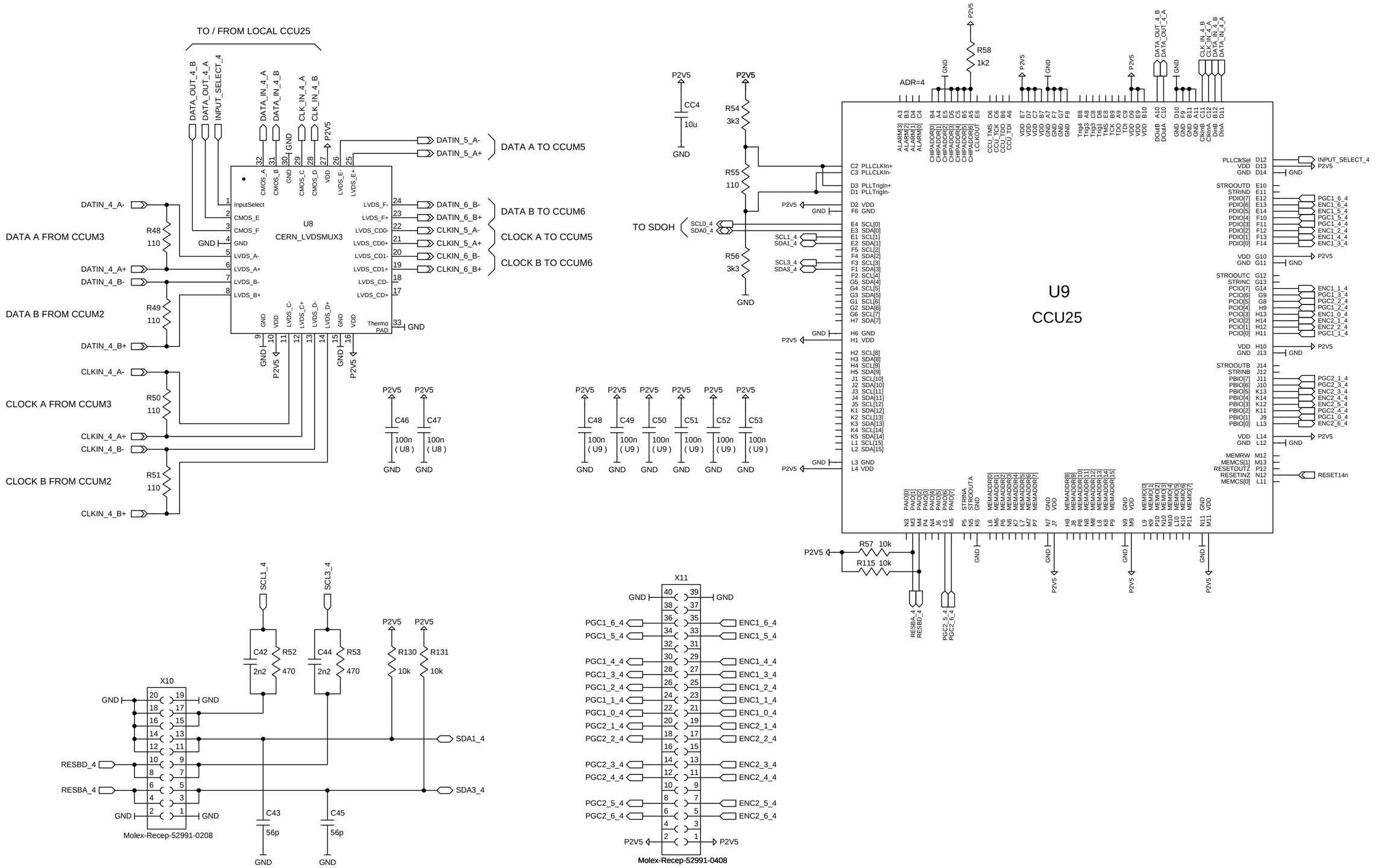

CCU Ring	Release 1.0 12-Apr-2013 Page 5 of 10
CCUM4	

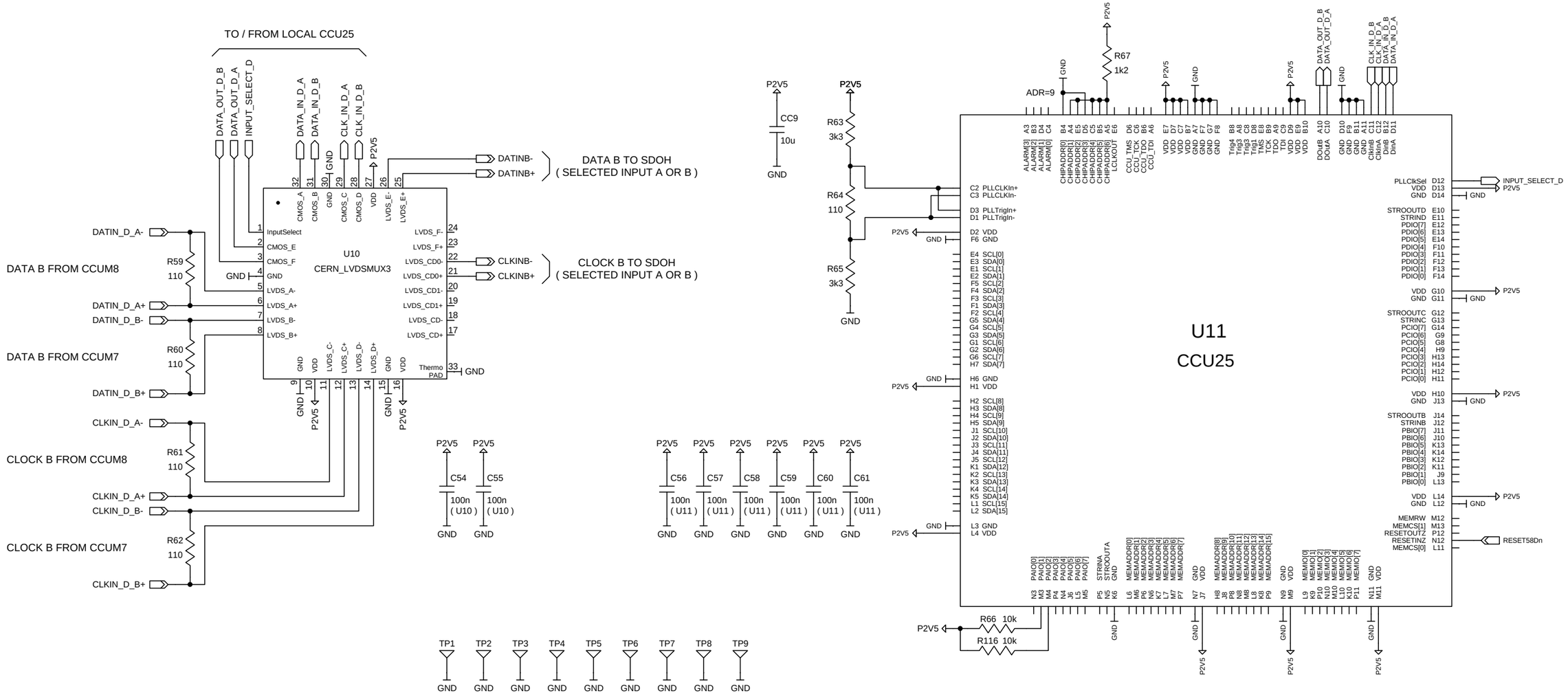

CCU Ring	Release 1.0 12-Apr-2013 Page 6 of 10
CCUM-DUMMY (CCUM9)	

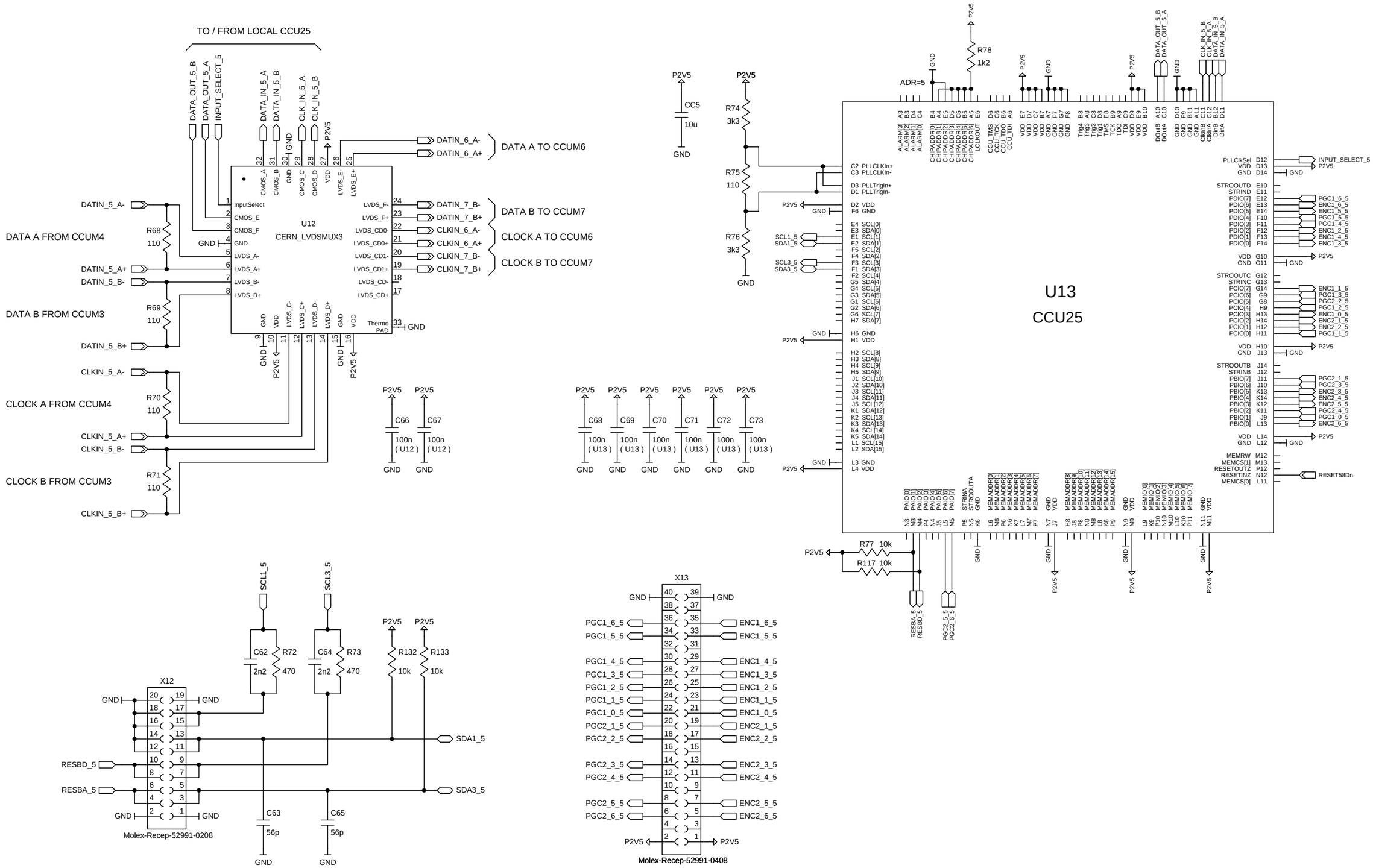

CCU Ring	Release 1.0 12-Apr-2013 Page 7 of 10
CCUM5	

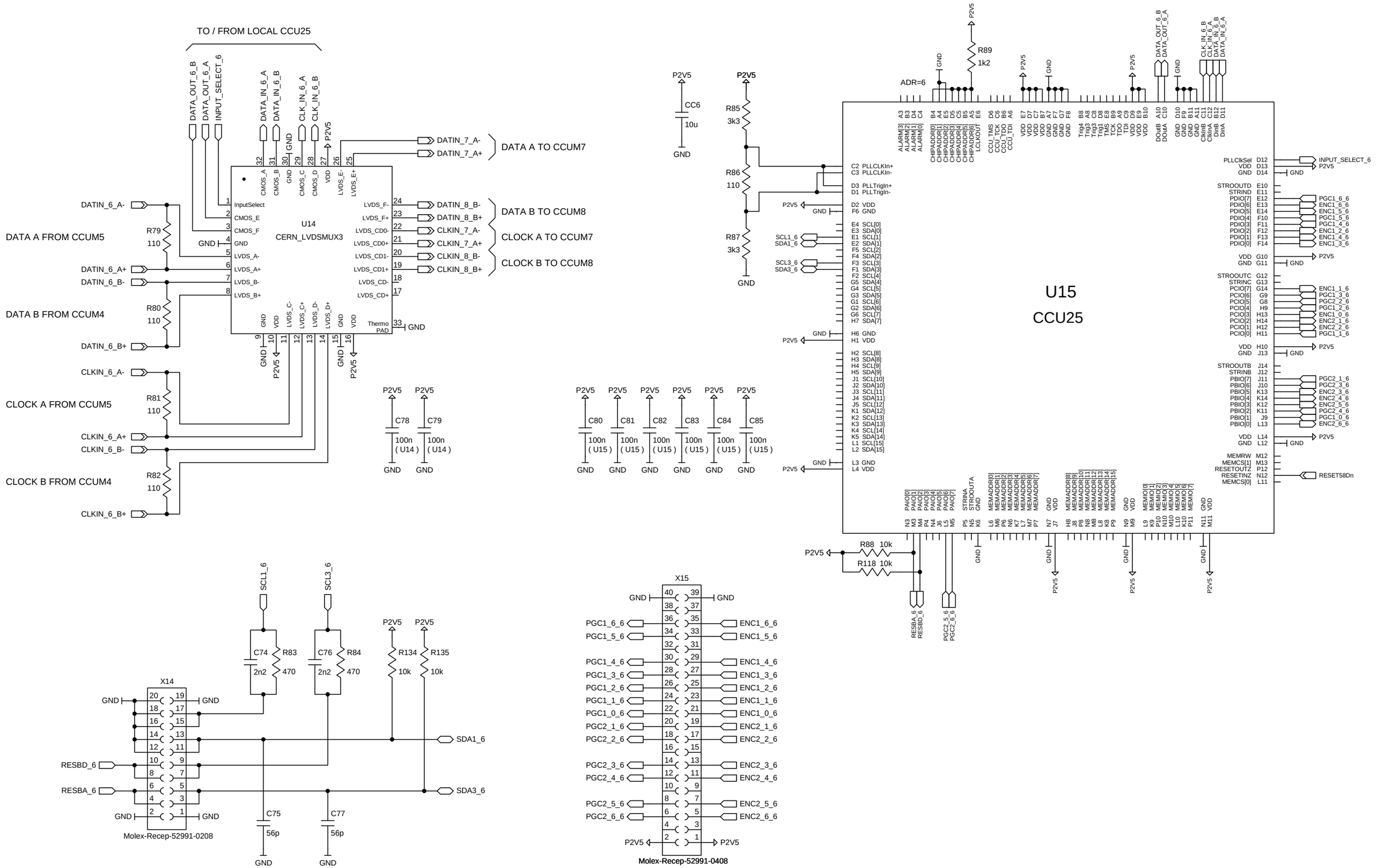

CCU Ring	Release 1.0 12-Apr-2013 Page 8 of 10
CCUM6	

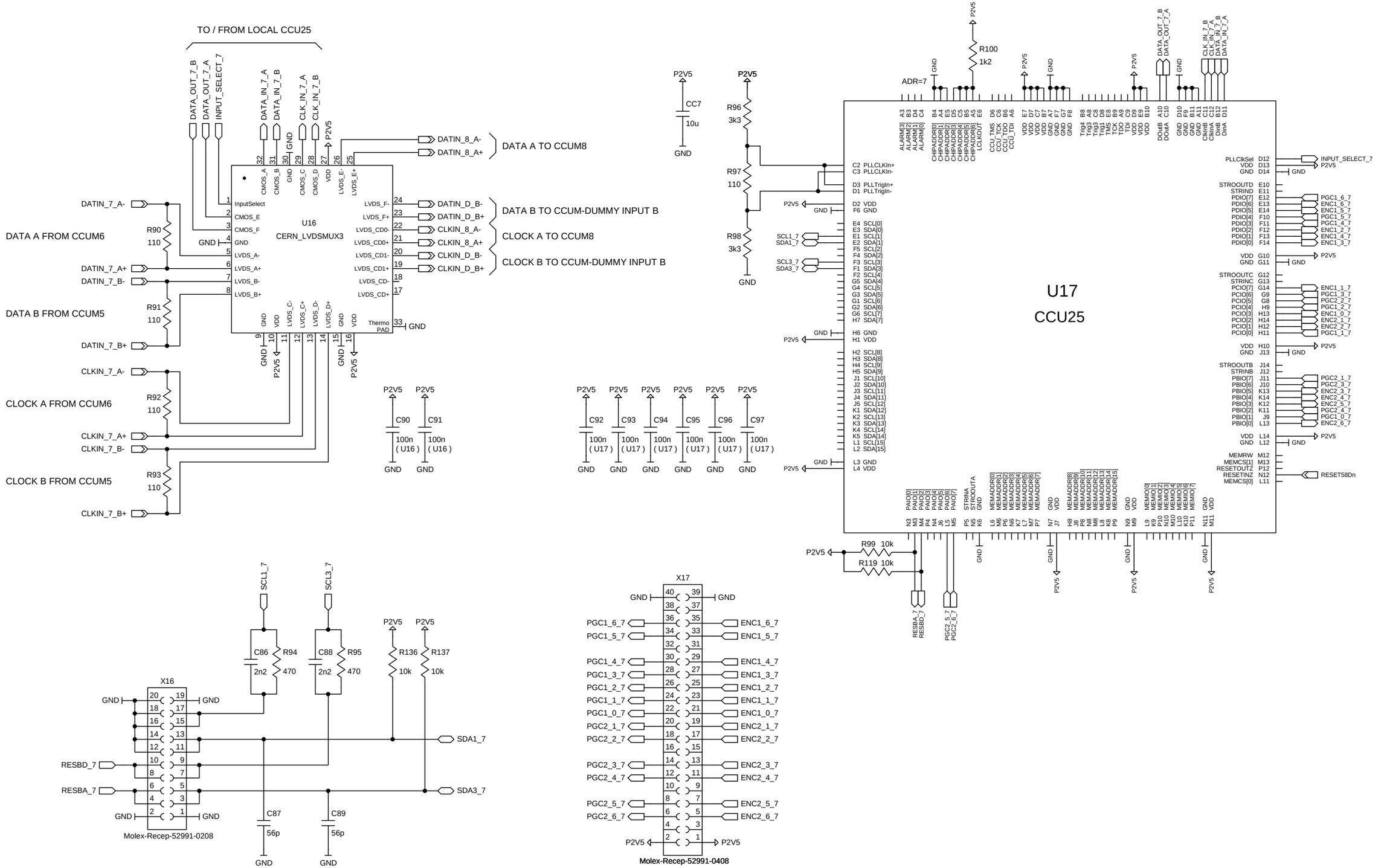

CCU Ring	Release 1.0 12-Apr-2013 Page 9 of 10
CCUM7	

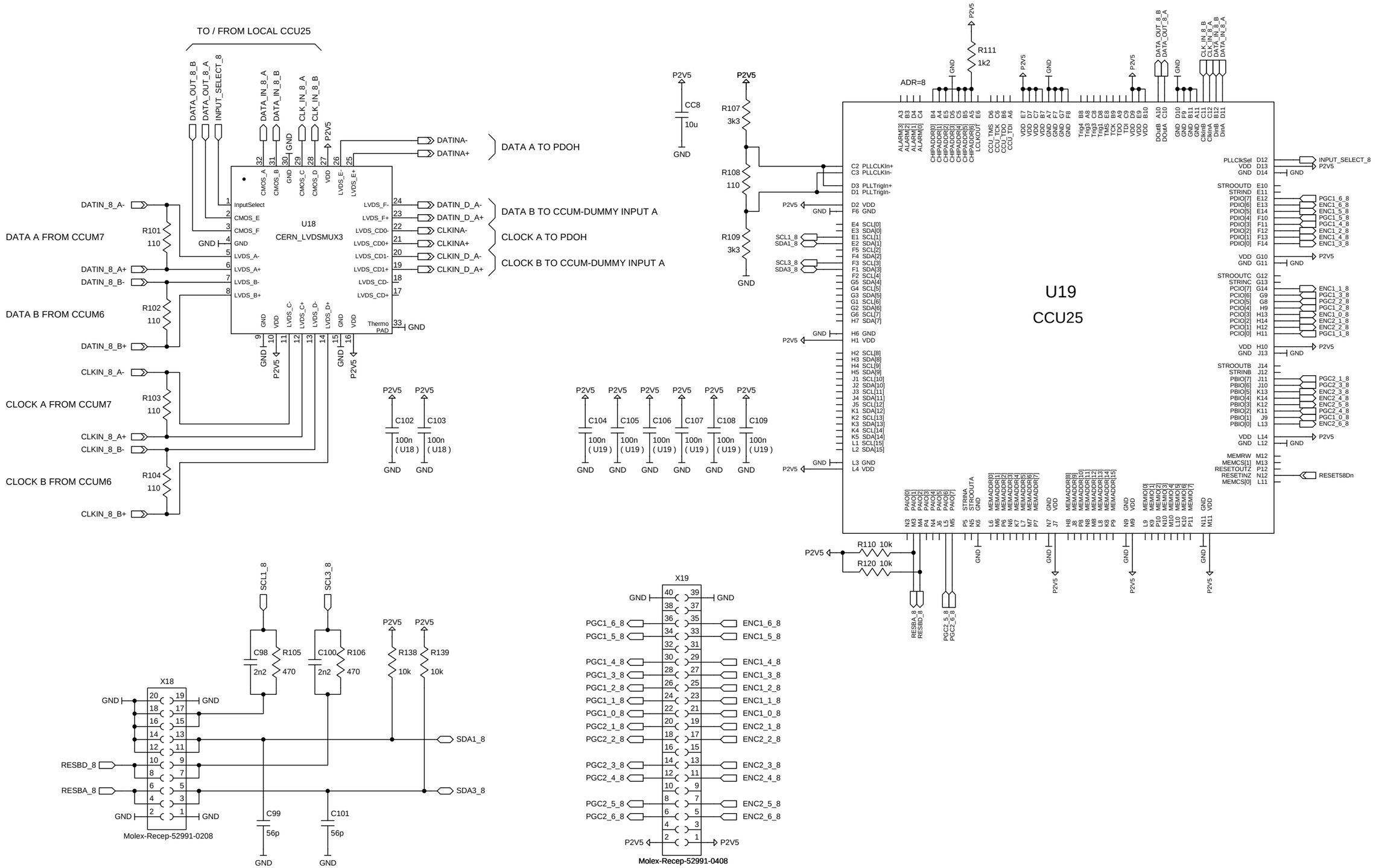

CCU Ring	Release 1.0 12-Apr-2013 Page 10 of 10
CCUM8	